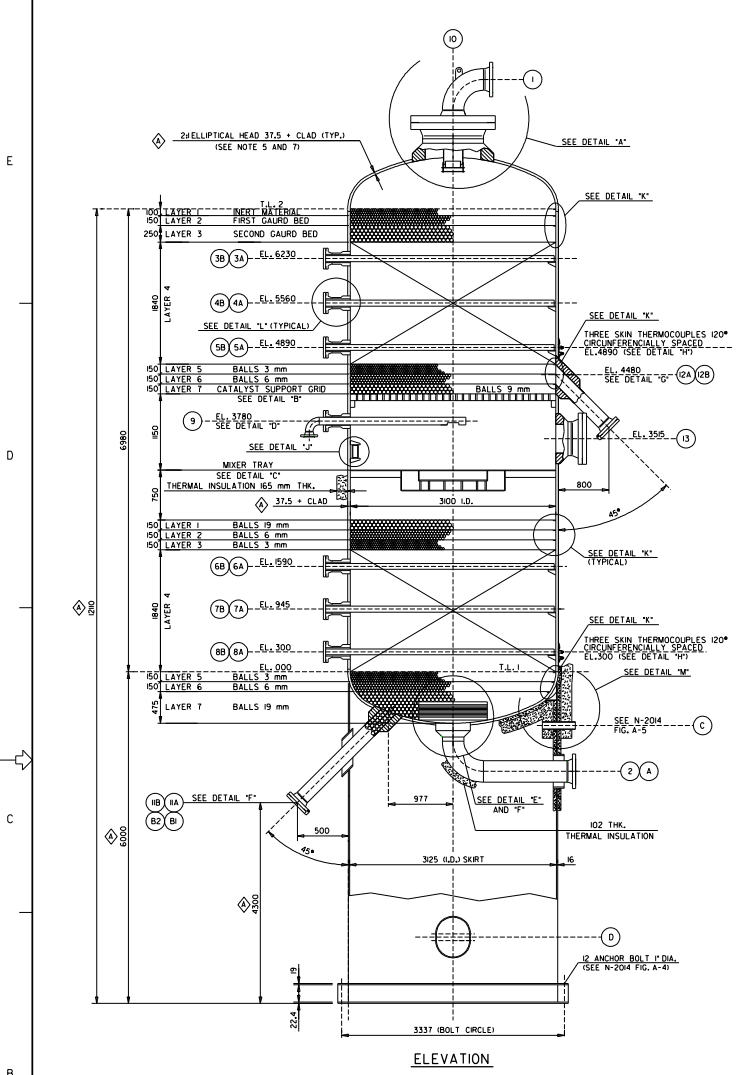

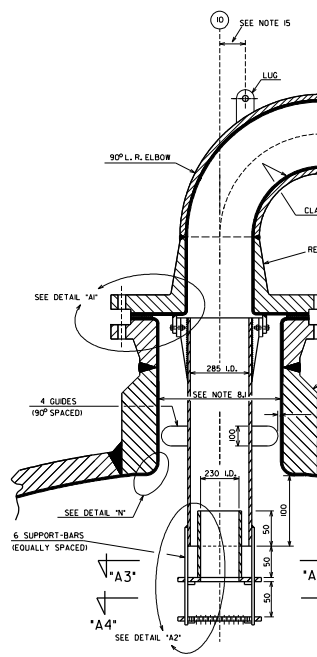

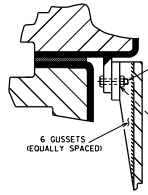

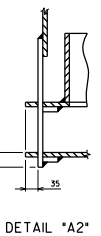

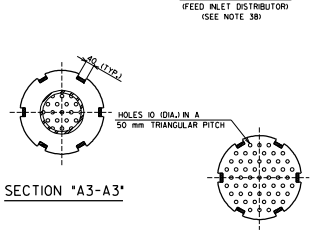

NOZZLES LIST

MARK	DIAM.	QTY.	RATING	TYPE	FACING	SCH (THK)	SERVICE
1	12 in	1	300#	WN	RF	*	FEED INLET (SEE NOTE 13)
2	14 in	1	300#	WN	RF	*	PRODUCT OUTLET
3A/B	6 in	2	300#	WN	RF	*	THERMOCOUPLE WELL
4A/B	6 in	2	300#	WN	RF	*	THERMOCOUPLE WELL
5A/B	6 in	2	300#	WN	RF	*	THERMOCOUPLE WELL
6A/B	6 in	2	300#	WN	RF	*	THERMOCOUPLE WELL
7A/B	6 in	2	300#	WN	RF	*	THERMOCOUPLE WELL
8A/B	6 in	2	300#	WN	RF	*	THERMOCOUPLE WELL (SEE NOTE 13)
9	6 in	1	300#	WN	RF	*	QUENCH INLET
10	36 in	1	300#	WN	RF	*	MANHOLE (SEE NOTE 13)
IIA/B	8 in	2	300#	WN	RF	*	CATALYST DISCHARGE
I2A/B	8 in	2	300#	WN	RF	*	CATALYST DISCHARGE
13	20 in	1	300#	WN	RF	*	MANHOLE
A	508	1	-	-	-	*	SLEEVE FOR NOZ. "2" (S. NOTE 40)
B1/2	406	2	-	-	-	*	SLEEVE FOR NOZ. "8A/B" (S. NOTE 40)
C	4 in	8	-	-	-	*	SKIRT VENT (SEE NOTE 40)
D	500x600	1	-	-	-	*	SKIRT ACCESS (SEE NOTE 40)

*BY DETAILING DESIGNER / MANUFACTURER

H_2 SERVICE

THIS EQUIPMENT HAS SPECIAL REQUIREMENTS, THEREFORE IT MUST BE MANUFACTURED CONFORM ALL THE APPLICABLE REQUIREMENTS LISTED IN THIS DOCUMENT, AND IN THE TECHNICAL SPECIFICATION I-ET-5275.00-2316-500-PPC-002.

REFERENCE STANDARDS AND DOCUMENTS

I-ET-5275.00-2316-500-PPC-001
I-ET-5275.00-2316-500-PPC-002
I-ET-5275.00-2316-500-PPC-003
I-ET-5275.00-2316-500-PPC-004
I-FD-5275.00-2316-941-PPC-002

NR-13 - CALDEIRAS E VASOS DE PRESSAO (RULES FROM BRAZILIAN MINISTRY OF LABOR)

ABNT NBR-6123

N-2	N-266	N-1591	N-1595	N-1693	N-2012
N-133	N-268	N-1592	N-1596	N-1696	N-2014
N-250	N-550	N-1593	N-1597	N-1707	N-2049
N-253	N-1590	N-1594	N-1598	N-1756	N-2054

GENERAL NOTES (CONTINUATION)

35- THE PRODUCT OUTLET NOZZLE (NOZZLE "2") SHALL NOT BE FLANGED INSIDE THE SKIRT.

36- THE METHOD OF INSTALLATION OF INTERNALS (INCLUDING BEAMS, CLIPS, WELDS, CLAMPS AND OTHERS DEVICES), SHOWED ON THIS DRAWING, IS SUGGESTED. THE ACTUAL DEVICES SHALL BE DEFINED BY THE MANUFACTURER, AND SHALL NOT OBSTRUCT THE FLOW INSIDE THE REACTOR. THE SUPPORTS FOR MIXER TRAY AND QUENCH SHALL ASSURE :
- TOTAL TIGHTNESS;
- ASSEMBLING AND DISASSEMBLING FROM THE MANHOLE;
- THE THERMAL EXPANSION (BETWEEN THE COMPONENTS OF THE TRAYS AND THE REACTOR) SHALL BE FORESEEN, AVOIDING INTERFERENCES, WARPS, STRESS CONCENTRATION ETC., IN ANY POINT ON THE ASSEMBLY, NEITHER ON THE REACTOR.

37- THE MANUFACTURER SHALL PRESENT A REPORT SHOWING THE SAFE CURVE PRESSURE X TEMPERATURE TO THE REACTOR 'S OPERATING, IN START-UPS AND SHUT-DOWNS, TO PREVENT (I.E., TO AVOID) BRITTLE FRACTURE AND TO PERMIT SUFFICIENT TIME FOR HYDROGEN DEGASSING (THAT WERE TRAPPED IN THE MATRIX MATRIX OF THE BASE METAL). THIS REPORT SHALL CONSIDER THE EFFECTS OF THE PLATE / FORGING THICKNESS AND THE MATERIAL DAMAGE DUE TO HIGH TEMPERATURE CREEP AND HYDROGEN EMBRITTLEMENT ON FRACTURE TOUGHNESS, TO PREDICT THE MINIMUM PRESSURIZATION TEMPERATURE. THIS REPORT SHALL INCLUDE A DIAGRAM SHOWING THE ALLOWED OPERATION RANGE AS A FUNCTION OF PRESSURE AND TEMPERATURE (AND ADDITIONAL LIMITATION DUE TO THE FLUID HANDLED IN NORMAL OPERATION OR TRANSIENT CONDITIONS; SHALL BE SHOWN ALSO THE MAXIMUM RATE IN TEMPERATURE INCREASING OR DECREASING AND IN PRESSURE INCREASING OR DECREASING, SHALL BE INDICATED. REFERENCE LITERATURE: "MINIMUM PRESSURIZATION TEMPERATURE OF PRESSURE VESSELS MADE OF CR-MO STEELS" - MADATE, L. & TAHARA T. (PRESSURE VESSELS AND PIPING CONFERENCE/HIGH PRESSURE TECHNOLOGY PVP Vol. 297, ASME 1995).

38- FEED INLET DISTRIBUTOR ;
38.1- THE FEED INLET DISTRIBUTOR MATERIAL's S.S. 347 SHALL BE BOLTED TO THE FLANGE COVER;
38.2- THE SUPPORT-BARS (SEE DETAIL "A"), SHALL NOT OBSTRUCT THE PASSING AREA MORE THAN 20% OF THE TOTAL AREA (I.E. THE PASSING AREA SHALL BE GREATER THAN 80%);
38.3- THE FEED INLET DISTRIBUTOR SHALL BE ONE PIECE ASSEMBLING.

39- EACH THERMOCOUPLE WELL SHALL HAVE THREE THERMOCOUPLES, ACCORDING TO DETAIL "L".

40- ALL THE OPENINGS IN THE SUPPORT SKIRT, SHALL BE PROPERLY REINFORCED, ACCORDING TO STANDARDS N-2012 FIG. 3, AND N-2014 FIGs. 5 AND 6.

41- THIS REACTOR SHALL COMPLY THE NR-13 (RULES FROM BRAZILIAN MINISTRY OF LABOR).

42- THE REMOVABLE INTERNALS WEIGHT INDICATED IN THIS DRAWING WAS ESTIMATED, THE MANUFACTURER SHALL CONFIRM THE ACTUAL WEIGHT.

43- THE MATERIAL OF INTERNAL FLAT STRIPS RESPONSABLE FOR SUPPORTING THE INTERNAL LAYERS OF INSULATION PLATES SHALL BE MADE OF AISI 304. GALVANIZED CARBON SHELL IS NOT ALLOWED.

4 44- DURING CATALYST SULFIDING, THE REACTOR WILL BE SUBJECTED TO THE FOLLOWING OPERATING CONDITIONS:
T = 345°C
P = 20,0 kgf/cm²
H_2S (vol%) = 0,45 (typ.) - 2,00 (max.)
H_2 (vol%) = 50,0
DURATION/FREQUENCY: 4 DAYS EVERY 2 YEARS

IDENTIFICATION

1	ITEM	K-2316004
2	QUANTITY	01(ONE)
3	SERVICE	SECOND STAGE HDS REACTOR
4		

OPERATING DATA

5	FLUID	HC + H2+ H2S + NH3 (SEE NOTE 11)	
6	SPECIAL SERVICES	☐LETHAL ☒H_2 ☐H_2S ☐	
7	NORMAL OPERATING PRESSURE	1,954 MPa(g)	19,90 kgf/cm²(g)
8	HYDROGEN SERVICE - PARTIAL PRESS.	1,2458 MPa (abs)	12,70 kgf/cm²(abs)
9	MAXIMUM OPERATING TEMPERATURE	330	°C
10	NORMAL OPERATING TEMPERATURE	277	°C
11	CATALYST REGENERATION OPERATING PRESSURE		kgf/cm²(g)
12	CATALYST REGENERATION OPERATING TEMPERATURE		°C

DESIGN DATA

13	CODE / EDITION / ADDENDA	ASME SECTION VIII DIV.1 ED. 2004/ADD. 2005	
14	NR-13 CLASSIFICATION	CLASS: A	CATEGORY: I
15	DESIGN PRESSURE	2,5664 MPa(g)	26,17 kgf/cm²(g)
16	DESIGN TEMPERATURE	395	°C
17	INTERNAL DIAMETER	3100	mm
18	TANGENT TO TANGENT LENGTH	6980	mm
19	TYPE OF HEADS	ELLIPTICAL 2d	
20	SHELL RADIOGRAPHY	FULL	
21	HEAD RADIOGRAPHY	FULL	
22	SHELL JOINT EFFICIENCY	100 %	
23	HEAD JOINT EFFICIENCY	100 %	
24	CORROSION ALLOWANCE	SEE NOTES 4 AND 5	mm
25	CLAD THICKNESS (WELD OVERLAY)	SEE NOTE 5	mm
26	WIND FORCE	(SEE NOTE 24)	

MATERIALS

27	SHELL	SA-387 Gr.22+ WELD OVERLAY (SEE NOTE 5)	
28	HEADS	SA-387 Gr.22+ WELD OVERLAY (SEE NOTE 5)	
29	NOZZLES - FLANGES	SA-182 Gr.F22+ WELD OVERLAY (SEE NOTE 5)	
30	- NECKS	SA-336 Gr.F22+ WELD OVERLAY (SEE NOTE 5)	
31	MANHOLES - FLANGES	SA-182 Gr.F22+ WELD OVERLAY (SEE NOTE 5)	
32	- NECKS	SA-336 Gr.F22+ WELD OVERLAY (SEE NOTE 5)	
33	- HEADS	SA-336 Gr.F22+ WELD OVERLAY (SEE NOTE 5)	
34	NOZZLE REINFORCEMENT	SELF-REINFORCED	
35	INTERNAL PIPING (NOT PRESSURIZED)	SA-312 Gr. TP347	
36	WELDED ATTACH.-INTERNALS	SA-240 TP 347 (SEE NOTE 9)	
37	- EXTERNALS	NONE (SEE NOTE 32)	
38	INTERNAL PARTS	SA-240 TP 347 (SEE NOTE 9)	
39	TRAYS (PLATES)	S.S. TP 347 (SEE NOTE 9)	
40	BOLTS AND NUTS - EXTERNAL	SA-193 Gr. B16	SA-194 Gr. 16
41	- INTERNAL	SA-193 Gr. B8C/B8T	SA-194 Gr. 8C/8T
42	EXTERNAL GASKETS (SEE NOTE 21)	GROOVED METAL SS TP 347 GRAPHITE COATED	
43	INTERNAL GASKETS	CERAMIC FIBER	
44	VESSEL SUPPORT (SKIRT) (SEE DET. "M")	SA-387 Gr.11 Cl.2 / SA-516 Gr. 60	
45	SKIRT BASE	SA-36	
46	ANCHOR BOLTS	SA 307 Gr. B	
47	WELD METAL OVERLAY (SEE NOTE 5)	S.S. TP 309L+TP 347	
48	INSULATION SUPPORTS	SA-387 Gr 11 / SA-516 (SEE NOTE 32)	
49	THERMAL INSULATION	CALCIUM SILICATE	
50			
51			

4 LOADS AT BASE (SEE NOTE 42)

52	LIFTING WEIGHT	454650 N	46388 kgf
53	ERECTION WEIGHT	632530 N	64538 kgf
54	SHUT DOWN WEIGHT	101752O N	10388 kgf
55	OPERATING WEIGHT	1028860 N	104904 kgf
56	TEST WEIGHT	1075630 N	109747 kgf
57	REMOVABLE INTERNALS WEIGHT	7960 N	812 kgf
58	CATALYST AND BALLS WEIGHT	384990 N	39281 kgf
59	EMERGENCY WEIGHT	———	———
60	ERECTION MOMENT	245270 N.m	25025 kgf.m
61	MAXIMUM MOMENT	281540 N.m	28726 kgf.m
62	MAXIMUM SHEAR	34420 N	3512 kgf
63			

MAXIMUM ALLOWABLE WORKING PRESSURE

64	CORRODED AND HOT	2,7939 MPa	28,49 kgf/cm²
65	LIMITED BY	CYLINDRICAL SHELL	
66			
67			

HYDROSTATIC TEST PRESSURE (SEE NOTES 16 AND 17)

68	NEW - HORIZONTAL POSITION		kgf/cm²
69	- VERTICAL POSITION		kgf/cm²
70	CORRODED - HORIZONTAL POSITION		kgf/cm²
71	- VERTICAL POSITION	3,6323 MPa	37,04 kgf/cm²
72	POINT OF MEASUREMENT (VERT. POS.)	TOP OF THE REACTOR	
73			

CONSTRUCTION

74	POSTWELD HEAT TREATMENT	YES (SEE NOTES 10 AND 31)
75	DUE TO H_2 SERVICE	ACC. TO I-ET-5275.00-2316-500-PPC-002
76	IMPACT TESTING	YES
77	CODE	ACC. TO I-ET-5275.00-2316-500-PPC-003
78	ELECTRODES	ACC. TO N-133 / I-ET-5275.00-2316-500-PPC-003
79	THERMAL INSULATION	☐ PERSONAL PROTECTION ☒ HEAT CONSERVATION
80	FIRE-PROOFING	ACCORDING TO N-1756
81	PAINTING	ACCORDING TO N-2
82	SHIPMENT	☒ ONE PIECE ☐ SHUT DOWN
83	INTERNAL CLADDING (SEE NOTE 5)	SS TP 309L + TP 347 (SEE NOTE 5)

GENERAL NOTES

4 1- CONTAMINANTS:

	NORMAL OPERATION		HIGH H_2S OPERATION		LOW WW
	INLET	OUTLET	INLET	OUTLET	OUTLET
H_2O VAPOR PHASE (mol%)	0,72	0,72	0,71	0,72	0,87
H_2 VAPOR PHASE (mol%)	22,75	21,77	22,7	21,70	46,70
H_2S VAPOR PHASE (mol%)	0,004	0,02	0,30	0,33	0,004
NH_3 VAPOR PHASE (mol%)	0,04	0,06	0,04	0,05	0,03

2- LOADS FOR MECHANICAL DESIGN FOR INTERNALS ;
2.1- CATALYST SUPPORT GRID ; 5 kgf/cm²
THE MANUFACTURER SHALL INDICATE IN THE REACTOR DRAWING, THE ALLOWABLE PRESSURE DROP (IN kgf/cm²), FOR THE CATALYST SUPPORT ASSEMBLY (THE CATALYST SUPPORT GRID PLUS THE CATALYST SUPPORT RING AND THE REACTOR WALL), TAKING INTO ACCOUNT THE ACTUAL GEOMETRY AND DIMENSIONS, CATALYST DENSITY= 800 kg/m³, TO DETERMINE THAT ALLOWABLE LOAD, THE MANUFACTURER SHALL CONSIDER THREE CONDITIONS, AT LEAST:
- THE ALLOWABLE PRESSURE DROP ONLY FOR THE CATALYST BED SUPPORT RING (LOCATED IN THE REACTOR WALL);
- THE ALLOWABLE PRESSURE DROP ONLY FOR THE CATALYST SUPPORT GRID;
- THE ALLOWABLE PRESSURE DROP OVER THE REGION THAT INCLUDES: THE REACTOR WALL, THE CATALYST SUPPORT RING AND THE CATALYST SUPPORT GRID, TAKING INTO ACCOUNT THE COMBINATING LOADS (INTERNAL PRESSURE PLUS BENDING MOMENT AND WEIGHT OF THE REACTOR).
THE OUTLET COLLECTOR SHALL BE DESIGNED TO SUPPORT TOTAL PRESSURE DROP OF REACTOR PLUS WEIGHT OF BOTTOM BED CATALYST AND ALUMINA BALLS.
2.2- OUTLET COLLECTOR ; 5 kgf/cm²
THE OUTLET COLLECTOR SHALL BE DESIGNED TO SUPPORT TOTAL PRESSURE DROP OF REACTOR PLUS WEIGHT OF BOTTOM BED CATALYST AND ALUMINA BALLS.
2.3- MIXER TRAY ; 0,25 kgf/cm² MAXIMUM PRESSURE DROP.

3- ALL DIMENSIONS ARE IN MILLIMETERS, EXCEPT OTHERWISE NOTED.

4- CORROSION ALLOWANCE FOR INTERNALS:
2,5mm FOR REMOVABLE PARTS;
4,0mm FOR FIXED PARTS.

5- CHARACTERISTICS OF CLAD :
5.1- WHERE POSSIBLE, THE PLATES SHALL HAVE INTEGRALLY BONDED TYPE CLAD, USING SS 347 AS THE MATERIAL FOR THE CLAD;
5.2- WHERE INTEGRALLY BONDED CLAD IS NOT POSSIBLE TO BE USED, THE WELD OVERLAY TYPE CLAD SHALL BE APPLIED. IN THOSE CASES, THE WELD METAL OVERLAY CLAD SHALL BE OBTAINED FROM TWO LAYERS:
FIRST LAYER: S.S. 309L IMIN. THK.= 3mm;
SECOND LAYER (EXTERNAL): S.S. 347 IMIN. EFFECTIVE THK. = 4mm).
5.3- THE WELD METAL OVERLAY IS CONSIDERED AS CORROSION ALLOWANCE;
5.4- FOR THE WELD METAL OVERLAY, THE MINIMUM UNDILUTED THICKNESS TO MEET CHEMICAL REQUIREMENTS OF S.S. TP 347 SHALL BE 4mm;
5.5- TOTAL THICKNESS (MAXIMUM) OF THE WELD METAL OVERLAY: 10mm.

6- PRECAUTIONS TO BE TAKEN WHENEVER OPENING OF THE REACTOR IN THE FIELD:
6.1- THE REACTOR SHALL BE KEPT FULLY CLOSED AT MOST OF THE TIME, TO AVOID THE ENTRANCE OF ANY KIND OF DEBRIS.
ONCE OPENED, THE REACTOR SHALL BE KEPT WITH A DRYING SYSTEM, WHICH WILL MAINTAIN THE INSIDE HUMIDITY AS LOW AS POSSIBLE (MAINLY AT NIGHT, TO AVOID THE INTERNAL CONDENSATION FROM MOISTURE).
6.2- ALL NOZZLES TO BE OPENED IN THE FIELD SHALL BE PROTECTED AGAINST ANY KIND OF DAMAGE AND/OR ACCUMULATION OF FOREIGN BODIES. IN THE GROOVES OF GASKETS WE SUGGEST THE FOLLOWING: THE GROOVE SHALL BE PROTECTED WITH A RING MADE BY WOOD, WITH 12 mm THICKNESS MINIMUM, AND KEPT IN THE NOZZLE WITH A TEMPORARY WOOD CLAMP ATTACHED TO THE WOOD RING;
6.3- THE NOZZLES OPENED IN THE FIELD SHALL BE COVERED WITH A WATERPROOF CANVAS TO AVOID THE ENTRANCE OF WATER FROM RAIN, STORMS AND OTHER SOURCES;
6.4- BEFORE ANY TEMPORARY CLOSING (AND IN THE FINAL CLOSING), ALL THE NOZZLE FLANGE FACES, SHALL BE CAREFULLY CLEANED, TO AVOID ANY DAMAGE TO THEM.

7- ALL THICKNESSES SHOWN IN THIS DRAWING ARE MINIMUM AFTER FORMING.

8- INTERNALS:
8.1- ALL REACTOR INTERNALS SHALL BE MADE WITH ELEMENTS WHICH CAN BE DISMANTLED IN ORDER TO ALLOW THEIR INTRODUCTION THROUGH MANHOLE AND THEIR ASSEMBLY INSIDE REACTOR (ALL ELEMENTS SHALL BE TAGGED TO ALLOW EASY INSTALLATION ON SITE);
8.2- INTERNALS SHALL BE INSTALLED IN THE REACTOR OR IN MOCK-UP FOR THE FINAL INSPECTION, AT THE MANUFACTURER WORKSHOP.
8.3- THE MANUFACTURER SHALL PRESENT AN ASSEMBLING AND DISASSEMBLING PLAN OF INTERNALS.

9- FOR REMOVABLE INTERNALS, THE MATERIAL TO BE USED IS S.S. 347 OR TP 321, HOWEVER, FOR ALL PARTS AND COMPONENTS WELDED IN THE INSIDE REACTOR WALL, IT SHALL BE USED ONLY S.S. 347 (SEE CLADDING ELEVATION).
9.1- ALL INTERNALS SHALL BE MANUFACTURED FROM THE MATERIALS PREVIOUSLY STABILIZED AND TESTED BY AN INTERGRANULAR CORROSION TEST, CONDUCTED BY THE MATERIALS SUPPLIER, IN ACCORDANCE TO THE STANDARD PRACTICES ASTM A 262, PRACTICE "E", AS STATED IN THE CORRESPONDING MATERIAL SPECIFICATION SUPPLEMENTARY REQUIREMENT;
9.2- IF ANY INTERNAL SHALL BE WELDED ITO ITSELF OR TO THE REACTOR, ITS WELDING PROCEDURE SHALL BE QUALIFIED INCLUDING THE INTERGRANULAR CORROSION TEST, IN ACCORDANCE TO THE STANDARD PRACTICES ASTM A 262, ALL FORESEEN PRACTICE "E", THIS WELDING PROCEDURE SHALL BE QUALIFIED FOR COMPLETE THERMAL CYCLES INCLUDING ONE EXTRA FOR PETROBRAS.

10- THE MANUFACTURER SHALL SPECIFY THERMAL POSTWELD TREATMENTS SO THAT PROPERTIES OF NEITHER BASE MATERIAL NOR CLADDING WILL BE ADVERSELY AFFECTED. PARTICULAR CONSIDERATION SHALL BE GIVEN TO THE TEMPERING CURVE OF BASE MATERIAL AND SENSITIZATION OF AUSTENITIC CLADDING (S.S.347).

11- THE SKIN-POINT APPARATUS, AS SHOWED IN THE DETAIL "H", MAY BE INSTALLED UPSIDE DOWN, WHEN NECESSARY, TO AVOID INTERFERENCE BETWEEN ITS WELDS AND ANY REACTOR SHELL WELD.

12- NOZZLE NECKS SHALL HAVE TRANSITION TO THE VESSEL BODY AS SHOWN IN FIGURE AD-560J AND FIGURE UG-40 (a), (a1), (g) OR (h).

13- THE DETAILING DESIGNER SHALL FURNISH TO THE MANUFACTURER, THE LOADS OVER THE NOZZLES CONNECTED TO PIPING. THE MANUFACTURER SHALL CHECK THE STRESSES ON EACH NOZZLE REGION (INCLUDING THE REACTOR WALL), TAKING INTO ACCOUNT THE THERMAL STRESSES DUE TO THE DIFFERENTIAL THERMAL EXPANSION BETWEEN THE EQUIPMENT FLANGE (ALLOY STEEL) AND THE PIPING FLANGE.

14- THERE SHALL BE INSTALLED A MANWAY (DIMENSIONS: 600 x 600) IN THE CENTER OF MIXER TRAY AND THE CATALYST SUPPORT GRID, TO ALLOW THE FULL ACCESS TO THE INSIDE OF THE REACTOR AND TO PERMIT THE CATALYST LOADING (SEE DETAIL "C").

15- THE LIFTING LUG, INDICATED IN DETAIL "A", SHALL BE LOCATED AT THE CENTER OF GRAVITY OF THE ASSEMBLY MADE BY THE FOLLOWING COMPONENTS: FEED INLET DISTRIBUTOR PLUS REDUCTION FLANGE (36in X 12in) PLUS L.R. ELBOW (12in) AND FLANGE (12in).

16- THE MANUFACTURER SHALL DEFINE THE MINIMUM WATER TEMPERATURE (THAT WILL ASSURE THE INTEGRITY OF THE REACTOR), TO BE USED IN THE HYDROSTATIC TEST, AT THE NEW CONDITION, AND AT CORRODED CONDITION. THESE DATA SHALL BE NOTED IN THE REACTOR DRAWING.

17- THE WATER TO BE USED IN HYDROSTATIC TEST SHALL HAVE CHLORIDE LIMITED TO 30 ppm. IN ADDITION TO THIS REQUIREMENT, IT IS NECESSARY TO FOLLOW A PROCEDURE IN ORDER TO ASSURE THAT ALL WATER SHALL BE REMOVED FROM REACTOR (DRYING) AFTER HYDROSTATIC TEST.

18- THE MANUFACTURER SHALL SUPPLY ;
- BLIND FLANGES, STUD BOLTS, NUTS AND GASKETS FOR MANHOLE AND CATALYST DISCHARGE NOZZLES;
- BLIND FLANGES, STUD BOLTS, NUTS, GASKETS AND PIPE FOR THERMOCOUPLE WELL NOZZLES (SEE DETAIL "L");
- REDUCTION FLANGE (36 x 12 in/S.S. TP 347), LONG RADIUS ELBOW (12in/S.S. TP 347) AND FLANGE (12 in/S.S. TP 347) - FOR CONNECTION ON NOZZLE "1" (SEE DETAIL "A");
- CLIPS FOR FIRE-PROOFING;
- BED RETAINING DEVICE (SEE DETAIL "F");
- BLIND FLANGE WITH LIFTING LUG FOR THE ERECTION OF THE REACTOR (SEE NOTE 29);
- ONE SET OF SPARE GASKETS, AND 10% SPARE OF STUDS, BOLTS AND NUTS;
- 5% SPARE OF CLAMPS, NUTS, BOLTS AND OTHER DEVICES USED TO FIXATION OF INTERNALS (BED SUPPORTS, TRAYS ETC.);
- A TIGHTENING MACHINE AND ALL NECESSARY ACCESSORIES TO TIGHT ALL FLANGE BOLTS - STUD BOLTS - OF THE REACTOR (THERE WILL BE FURNISHED ONLY ONE MACHINE FOR ALL REACTORS). THIS TIGHTENING MACHINE SHALL BE HYDRAULIC BOLT TENSIONER TYPE AND SHALL CONTROL THE CLAMPING FORCE WITH HIGH ACCURACY, AND SHALL TIGHT SIMULTANEOUSLY AT LEAST 50% OF THE STUD BOLTS OF ANY FLANGE OF THE REACTOR.

19- THE DETAILING DESIGNER SHALL DEFINE :
- NOZZLES ORIENTATION;
- LOCATION OF CLIPS FOR INSULATION SUPPORTS;
- ALL ELEVATIONS NOT INDICATED IN THIS DRAWING.

20- THE DETAILING ENGINEERING SHALL COMPATIBILIZE THE NOZZLES WITH PIPING SPECIFICATIONS.

21- FLANGES ;
21.1- THE FLANGES SHALL BE ACCORDING TO ASME B16.5 OR ASME B16.47 (SERIE B) AND GASKETS FOR NOZZLES WHICH HAVE SPECIFIED INTERNAL DIAMETER (SEE NOZZLES LIST).
21.2- THE FLANGE FACE FINISH IS 125 MICRO INCHES RMS, THE NOZZLES FLANGES 1 AND 2 SHALL BE COMPATIBILIZED WITH PIPE SPECIFICATION.

22- FOR THE MIXER TRAY, THE SLOTTED HOLES AT UPPER SIDE PLATE ARE ROTADED OF 90° IN RELATION OF THE SLOTTED HOLES AT INFERIOR SIDE PLATE (SEE DETAIL "C").

23- SPACING BETWEEN TRAYS/PLATES IS MEASURED RELATING TO THE TOP OF SUPPORT RING.

24- THE REACTOR SHALL BE DESIGNED TO RESIST A STATIC AND/OR DYNAMIC WIND LOAD, ACCORDING TO NBR-6123. THE FOLLOWING DATA SHALL BE CONSIDERED:
- BASIC WIND VELOCITY ; Vo = 40m/s.
- GROUND CATEGORY (ACCORDING TO NBR-6123) : II

25- THE ELBOW INDICATED ON DETAIL "D" FOR NOZZLE 9 IS NECESSARY TO ALLOW THE REMOVAL OF THE QUENCH INLET WITHOUT THE NEED OF PIPING REMOVAL.

26- THE NEUTRAL LINE OF THE HEADS SHALL BE ALIGNED WITH THE NEUTRAL LINE OF THE SHELL.

27- THE CATALYST SUPPORT GRID AND THE OUTLET COLLECTOR, SHALL BE MADE BY A GRID TYPE "VEE-PROFILE WIRE SCREEN", AS DEFINED BELOW:
VEE-PROFILE WIRE SCREEN : - SLOTS OPENING = 0,8 mm (MAX.);
- WIRE WIDTH = 2,2 mm (MIN.);
- OPEN AREA = 20% (MIN.);
- ACCEPTABLE SUPPLIERS:
EUROSLOT
JOHNSON SCREENS
THE VEE-PROFILE WIRE SCREEN SHALL BE INSTALLED IN SUCH WAY THAT THERE SHALL BE NO LEAKAGE AMONG ITS UNIONS, AND:
- FOR THE CATALYST SUPPORT GRID: THE FLAT SIDE OF THE SCREEN SHALL BE INSTALLED ON THE UPPER SIDE (SEE DETAILS "B");
- FOR THE OUTLET COLLECTOR: THE FLAT SIDE OF THE SCREEN SHALL BE INSTALLED AT THE EXTERNAL SIDE (SEE SECTION "E1- E1").

28- IN ADDITION TO THE CORROSION BLOCKS (SEE DETAIL "J"), THE SUPPLIER SHALL PROVIDE EXTRA PLATES (TEST COUPONS) FOR FUTURE HEAT TREATMENTS AND TESTING - SEE I-ET-5275.00-2316-500-PPC-003.

29- FOR THE REACTOR'S ERECTION, THERE SHALL BE USED A LIFTING LUG WELDED AT A BLIND FLANGE CONNECTED TO NOZZLE ON THE TOP HEAD (NOZZLE 10). ONLY ONE BLIND FLANGE SHALL BE USED FOR ERECTING ALL THE REACTORS (TWO REACTORS).
FOR EACH REACTOR, THE MANUFACTURER SHALL PERFORM STRESS ANALYSIS (ACCORDING TO APP. 4, FROM ASME CODE SEC. VIII DIV. 2), OF THE NOZZLE REGION TAKING INTO ACCOUNT THE ACTUAL GEOMETRY AND WEIGHT OF THE REACTOR.

30- FOR AREAS WITH STRESS CONCENTRATION, THE FIRST LAYER (S.S. TP 309L) OF THE INTERNAL WELD OVERLAY, SHALL BE DEPOSITED BEFORE FINAL PWHT, AND THE FINAL LAYER (S.S. TP 347), AFTER THE FINAL PWHT. THE AREAS WITH STRESS CONCENTRATION SHALL BE INDICATED BY THE MANUFACTURER, BUT IT SHALL CONTAIN THE FOLLOWING REGIONS (AT LEAST):
- INTERNAL CORNER NOZZLE RADIUS (SEE DETAIL "N");
- SUPPORT-RING FOR THE CATALYST BED (SEE DETAILS "P");
- INTERNAL ATTACHMENTS (SEE DETAILS "O" AND "R").

31- THE MANUFACTURER SHALL GUARANTEE THE CORROSION RESISTANCE OF AUSTENITIC CLADDING (S.S. 347), AFTER PWHT. A REPRESENTATIVE COUPON SHALL BE TESTED ACCORDING TO ASTM A-262, PRACTICE E.

32- THE REACTOR SHALL NOT HAVE ANY EXTERNAL STRUCTURAL ATTACHMENTS WELDED ON THE REACTOR SHELL. ADDITIONALLY, PLATFORMS SHALL NOT BE SUPPORTED BY REACTOR SHELL (THERE WILL BE A LATERAL STRUCTURE FOR SUPPORT THEM, FOR THERMAL INSULATION). THERE WILL BE A STRUCTURE INVOLVING THE REACTOR SHELL, SUPPORTED ONLY ON THE SKIRT. THE USE OF RINGS FOR STIFFENING BLIND FLANGES ASSEMBLING AND DISASSEMBLING IS FORBIDDEN, THEN THERE SHALL BE AN EXTERNAL DAVIT (SUPPORTED BY THE PLATFORM) FOR THIS PURPOSE.

33- REFERENCE CLIPS, AT EACH OCCURRENCE (LEVEL), THERE SHALL BE SIX PLATES LOCATED CIRCUNFERENTIALLY. THESE PLATES WILL BE HELPFUL FOR LIMITATION OF CATALYST AND INERT BALLS BEDS. THEY SHALL BE WELDED

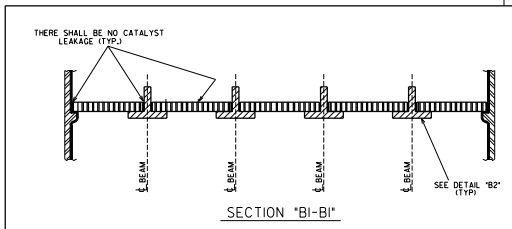

SECTION "BI-BI"

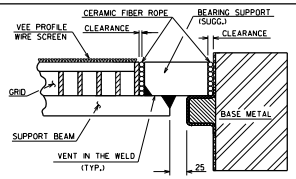

DETAIL "B4"
(SEE NOTE 36)

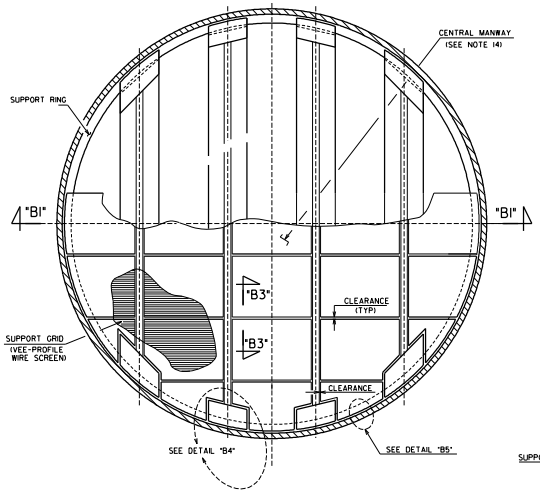

DETAIL "B"
(CATALYST SUPPORT GRID)
(SEE NOTES 27 AND 36)

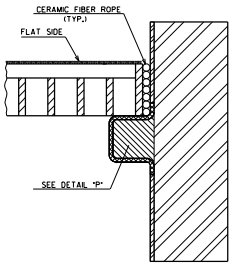

DETAIL "B5"
(CATALYST BED SUPPORT)

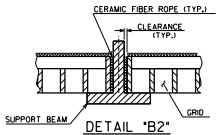

DETAIL "B2"
(SUPPORT BEAMS)

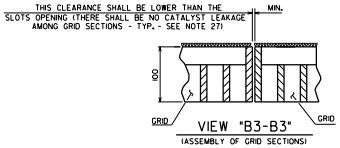

VIEW "B3-B3"
(ASSEMBLY OF GRID SECTIONS)

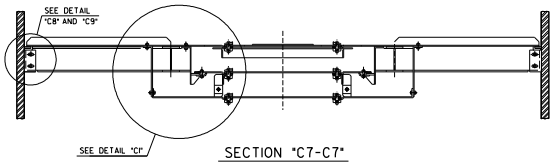

SECTION "C7-C7"

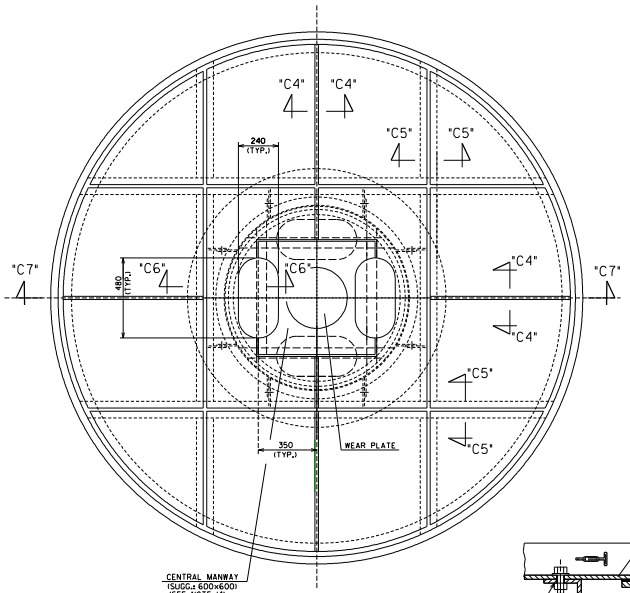

DETAIL "C"
(MIXER TRAY - SEE NOTES 22 AND 36)

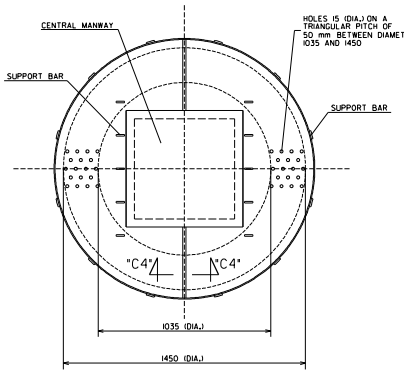

SECTION "C3-C3"

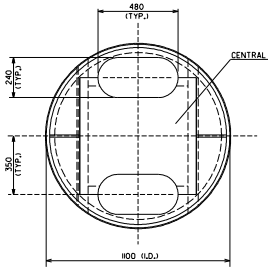

SECTION "C2-C2"

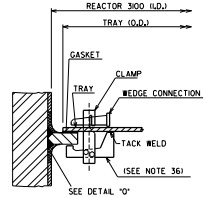

DETAIL "C9"
(CLAMPS - TYPICAL FOR ALL TRAYS)

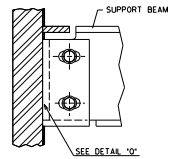

DETAIL "C8"
(SUPPORTING FOR SUPPORT BEAMS)
(TYPICAL SUPPORTING FOR ALL BEAMS)

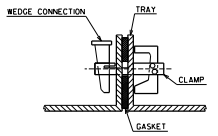

SECTION "C4-C4"
(TYPICAL UNION FOR ALL TRAYS - SUGG.)
(SEE NOTE 36)

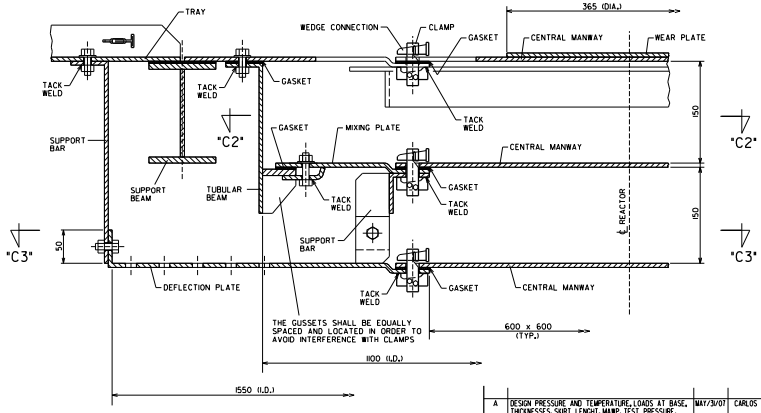

DETAIL "C1"

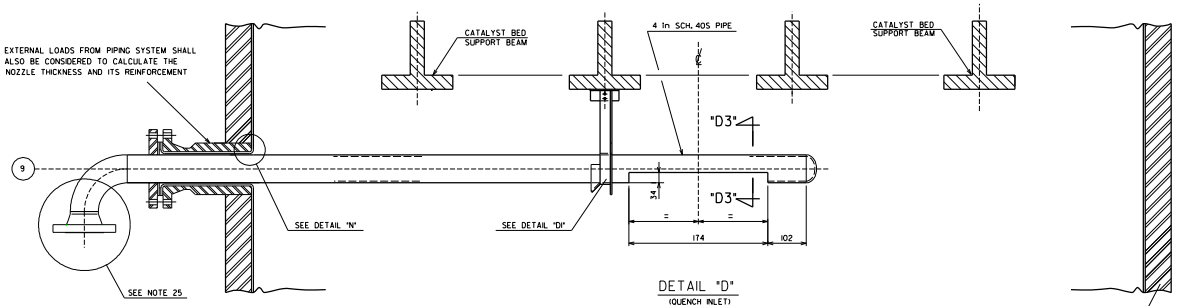

DETAIL "D"
(QUENCH INLET)
(SEE NOTE 36)

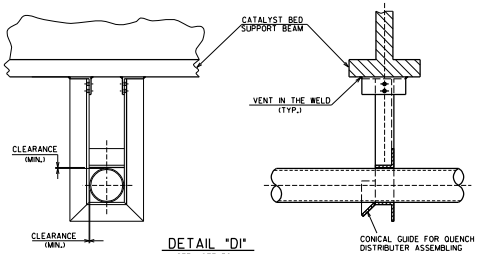

DETAIL "DI"
(SEE NOTE 36)

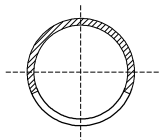

SECTION "D3-D3"

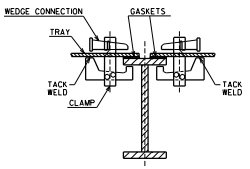

SECTION "C5-C5"
(TYPICAL FOR BEAMS OF ALL TRAYS)
(SEE NOTE 36)

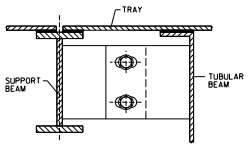

SECTION "C6-C6"

H2 SERVICE

THIS EQUIPMENT HAS SPECIAL REQUIREMENTS, THEN IT MUST BE MANUFACTURED CONFORM ALL THE APPLICABLE REQUIREMENTS LISTED IN THIS DOCUMENT, AND IN THE TECHNICAL SPECIFICATION I-ET-5275.00-236-500-PPC-002.

REV.	DESCRIPTION	DATE	EXEC.	CHECK	APPROV.
A	DESIGN PRESSURE AND TEMPERATURE, LOADS AT BASE, THICKNESSES, SKIRT LENGHT, MAWP, TEST PRESSURE, NOZZLE 2 DIAMETER, NOTE 1, H_2 PARTIAL PRESSURE, CATALYST DISCHARGE ELEVATION, INCLUDED NOTE 44	MAY/31/07	CARLOS	VM.JCC	ROBERTO
0	ORIGINAL ISSUE	DEC/18/06	CARLOS	PATRICIO	ROBERTO

THE DATA, OR PART THEREOF, ARE PETROBRAS PROPERTY AND THUS MUST NOT BE USED IN ANY WAY WITHOUT PERMISSION

MICROSTATION/V.08.05.02.35 EXEC.

PETRÓLEO BRASILEIRO S.A. PETROBRAS | CENPES

CLIENT OR USER: RECAP

JOB OR PROJECT: CARTEIRA DE INSTAVEIS E GASOLINA

AREA OR UNIT: UNIDADE DE HDS DE NAFTA CRAQUEADA (U-2316)

TITLE: SECOND STAGE HDS REACTOR K-2316004

DESIGN	CENPES	DRAWN	EEO	CHECK	PATRICIO	APPROVAL	ROBERTO
SCALE	WITHOUT SCALE	SIZE	A1	CC	527504040	SHEET	02 of 04
DATE	DEC/18/2006	No.	I-DE-5275.00-2316-570-PPC-004				

\527504040\I-5275.00-2316-570-PPC-004-FL_2 - RA.dgn 12/6/2007 11:19:05

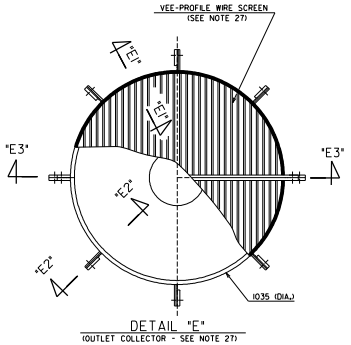

DETAIL "E"
(OUTLET COLLECTOR - SEE NOTE 27)

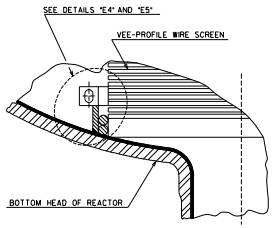

SECTION "E2- E2"
(OUTLET COLLECTOR - DETAIL OF SCREWING ON THE BOTTOM HEAD)

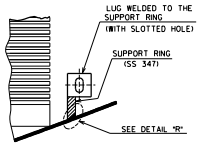

DETAIL "E4"

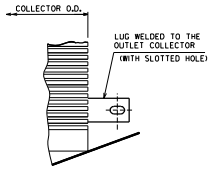

DETAIL "E5"

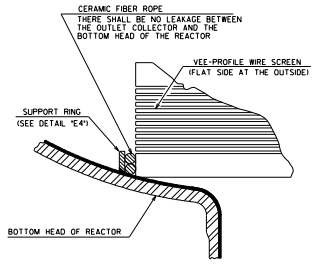

SECTION "E1- E1"

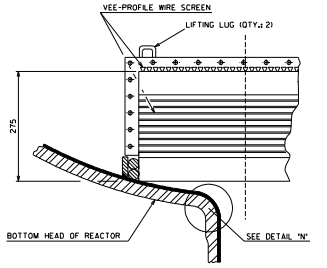

SECTION "E3- E3"
(OUTLET COLLECTOR - TYPICAL DETAIL OF ASSEMBLING THE PARTS)

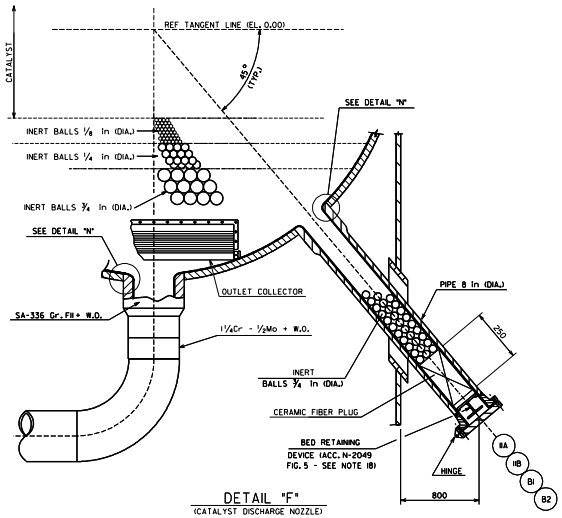

DETAIL "F"
(CATALYST DISCHARGE NOZZLE)

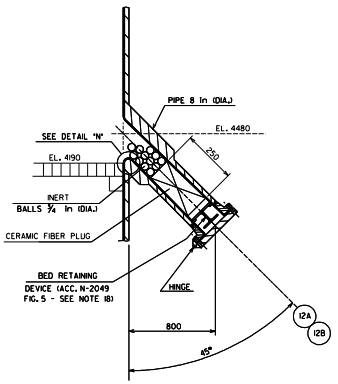

DETAIL "G"
(CATALYST DISCHARGE NOZZLE)

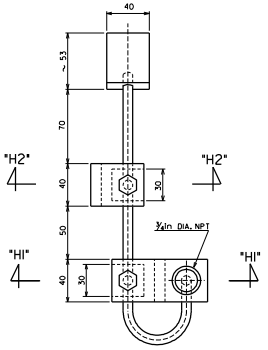

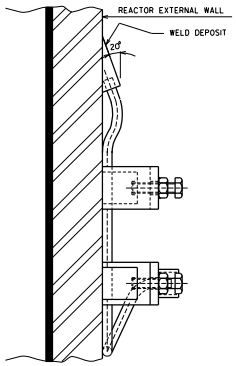

DETAIL "H"
(SKIN THERMOCOUPLES - SEE NOTE 11)

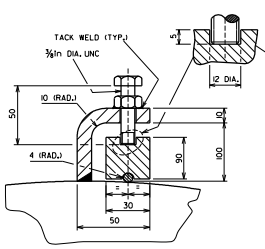

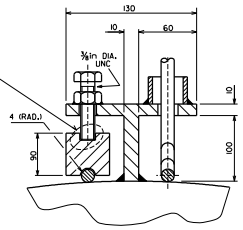

SECTION "H2-H2"

SECTION "H1-H1"

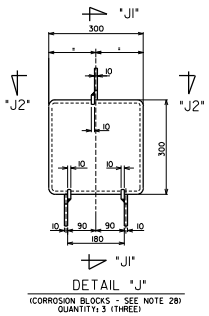

DETAIL "J"
(CORROSION BLOCKS - SEE NOTE 28)
QUANTITY: 3 (THREE)

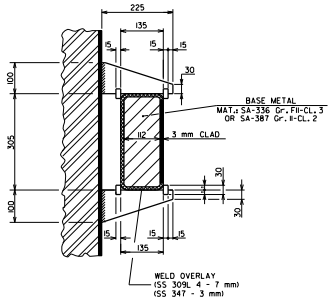

SECTION "J1-J1"

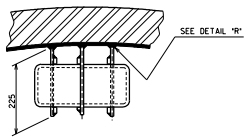

VIEW "J2-J2"

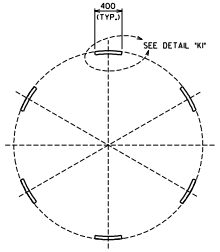

DETAIL "K"
REFERENCE CLIPS (SEE NOTE 33)

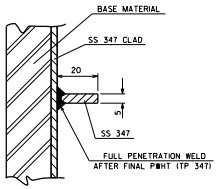

DETAIL "K1"

H_2 SERVICE

THIS EQUIPMENT HAS SPECIAL REQUIREMENTS. THEN IT MUST BE MANUFACTURED CONFORM ALL THE APPLICABLE REQUIREMENTS LISTED IN THIS DOCUMENT, AND IN THE TECHNICAL SPECIFICATION I-ET-5275.00-2316-500-PPC-002.

REV.	DESCRIPTION	DATE	EXEC.	CHECK	APPROV.
A	DESIGN PRESSURE AND TEMPERATURE, LOADS AT BASE, THICKNESSES, SKIRT LENGHT, MAWP, TEST PRESSURE, NOZZLE 2 DIAMETER, NOTE 1, H_2 PARTIAL PRESSURE, CATALYST DISCHARGE ELEVATION, INCLUDED NOTE 44	MAY/31/07	CARLOS	VM.JCC	ROBERTO
0	ORIGINAL ISSUE	DEC/18/06	CARLOS	PATRICIO	ROBERTO

THE DATA, OR PART THEREOF, ARE PETROBRAS PROPERTY AND THUS MUST NOT BE USED IN ANY WAY WITHOUT PERMISSION

MICROSTATION/V.08.05.02.35

PETRÓLEO BRASILEIRO S.A. PETROBRAS | CENPES

CLIENT OR USER: RECAP

JOB OR PROJECT: CARTEIRA DE INSTAVEIS E GASOLINA

AREA OR UNIT: UNIDADE DE HDS DE NAFTA CRAQUEADA (U-2316)

TITLE: SECOND STAGE HDS REACTOR K-2316004

DESIGN	CENPES	DRAWN	EQ	CHECK	PATRICIO	APPROVAL	ROBERTO
SCALE	WITHOUT SCALE	SIZE	A1	CC	527504040	SHEET	03 of 04
DATE	DEC/18/2006	No.	I-DE-5275.00-2316-570-PPC-004				

STANDARDIZED FORM BY EP-28-1000 - FIGURE A32

\527504040-I-5275.00-2316-570-PPC-004-FL. 3 - RA.dgn 12/6/2007 11:20:04

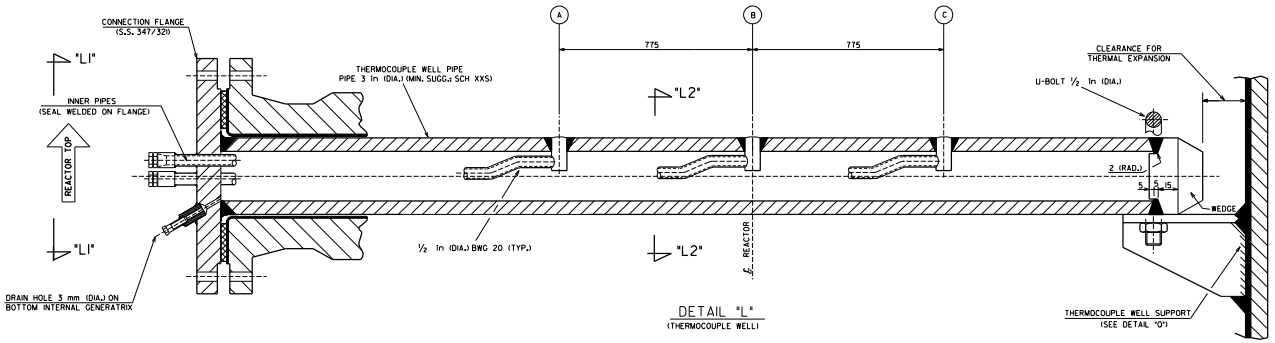

DETAIL "L"
(THERMOCOUPLE WELL)

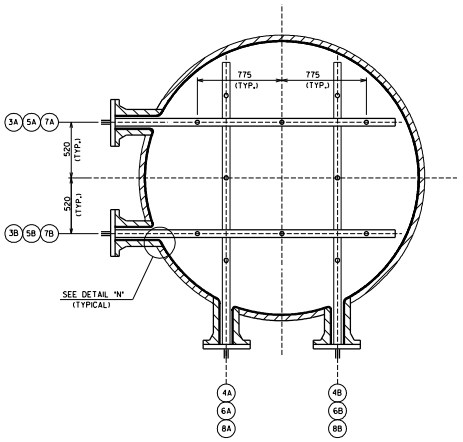

THERMOWELLS LOCATION

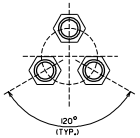

VIEW "LI-LI"
(ORIENTATION OF INNER PIPES
OF CONNECTION FLANGE)

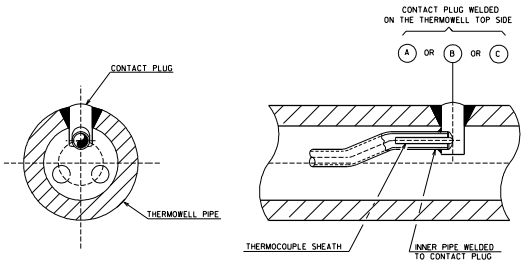

SECTION "L2-L2"

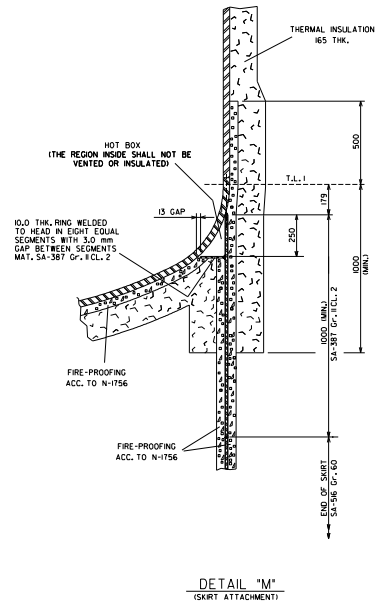

DETAIL "M"
(SKIRT ATTACHMENT)

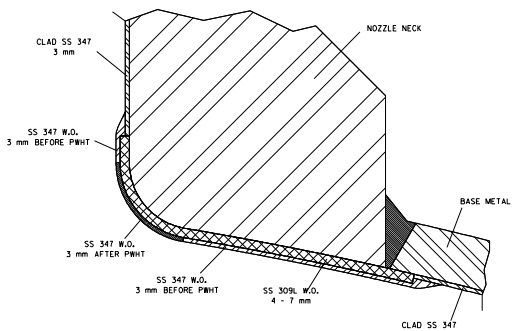

DETAIL "N"
(TYPICAL FOR ALL NOZZLES)

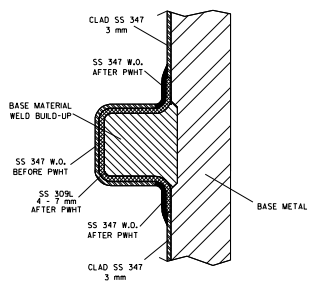

DETAIL "P"
(CATALYST BED SUPPORT)

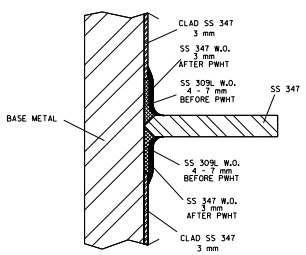

DETAIL "O"
(TYPICAL FOR SUPPORTS)

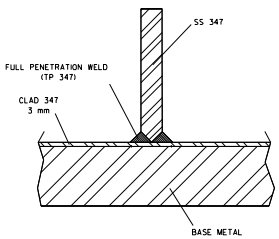

DETAIL "R"
(TYPICAL FOR SUPPORTS)

H_2 SERVICE

THIS EQUIPMENT HAS SPECIAL REQUIREMENTS, THEN IT MUST BE MANUFACTURED CONFORM ALL THE APPLICABLE REQUIREMENTS LISTED IN THIS DOCUMENT, AND IN THE TECHNICAL SPECIFICATION I-ET-5275.00-2316-500-PPC-002.

REV.	DESCRIPTION	DATE	EXEC.	CHECK	APPROV.
A	DESIGN PRESSURE AND TEMPERATURE, LOADS AT BASE, THICKNESSES, SKIRT LENGHT, MANW. TEST PRESSURE, NOZZLE 2 DIAMETER, NOTE 1, H_2 PARTIAL PRESSURE, CATALYST DISCHARGE ELEVATION, INCLUDED NOTE 44	MAY/31/07	CARLOS	WAJCC	ROBERTO
0	ORIGINAL ISSUE	DEC/18/06	CARLOS	PATRICIO	ROBERTO

THE DATA, OR PART THEREOF, ARE PETROBRAS PROPERTY AND THUS MUST NOT BE USED IN ANY WAY WITHOUT PERMISSION

MICROSTATION/V.08.05.02.35

PETRÓLEO BRASILEIRO S.A. PETROBRAS

CENPES

CLIENT OR USER: RECAP

JOB OR PROJECT: CARTEIRA DE INSTAVEIS E GASOLINA

AREA OR UNIT: UNIDADE DE HDS DE NAFTA CRAQUEADA (U-2316)

TITLE: SECOND STAGE HDS REACTOR
K-2316004

DESIGN	CENPES	DRAWN	EEO	CHECK	PATRICIO	APPROVAL	ROBERTO
SCALE	WITHOUT SCALE	SIZE	A1	CC	527504040	SHEET	04 of 04
DATE	DEC/18/2006	No.	I-DE-5275.00-2316-570-PPC-004				